HAP 1.15
HOIST ANCHOR PLATE

Technical Datasheet (UE version)

Update: 03-2022

HAP.15 Hoist Anchor Plate

Hoist Anchor Plate with 1.15 t WLL capacity for elevator shaft operations

Anchor Version

Benefits

- No limitation in load direction, hook (shackle) can rotate and swivel, symmetric design of base plate with 4 anchors
- Design fits application requirements of vibratory dynamic loads from motorized hoisting with dynamic safety factor of 1.8
- Anchorage of hoist point can be designed with PROFIS Anchor software, cracked and uncracked concrete, ≥ C20/25
- Recommended anchors:
  - HST3 M12 (h_{ef}=70mm) or KB-TZ ½" (h_{ef}=3 ¼'')
- Delivered pre-assembled (one piece), no need for assembly
- Compact design, only 155 x 155 x 52 mm (when shackle is
  - folded to plate)
- Global safety factor of 4 for all steel connections

Base material

Concrete (non-cracked)

Concrete (cracked)

Other information

PROFIS
Anchor design
Software

Aplications

The HAP 1.15 is designed for temporary and permanent application under dry indoor conditions, to be used as post installed "master hoist point" for installation and/or maintenance in elevator shafts. It can be used with manual or motor hoists and bears a working load up to 1.15 metric tons in variable directions.

Warning

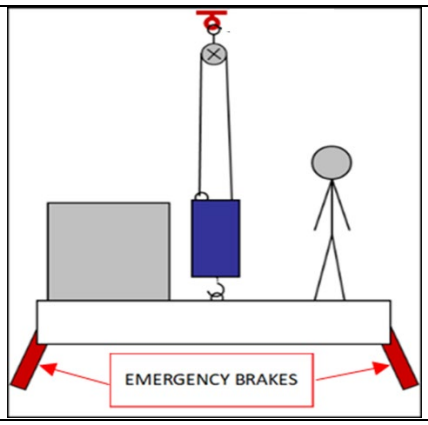

Men riding (Car-top Lift-installation Method) (worker and material on top of the cabin)
In case the main hoist point fails, the platform falls ~0.3m until the elevator safety-gears will automatically activate bringing the elevator cabin to a complete stop. Emergency brakes need to be activated.

Basic loading data

Data for WLL_{total} applies to

- Correct design of anchorage (see “design of anchorage”)
- Correct setting of anchors
- No edge distance influence
- Cracked concrete, C20/25, $f_{ck,cube}$ = 25 N/mm² Cracked concrete, ACI 318-14 design (cylindrical test method): f'_c = 2500 psi
- No shock loading; vibratory dynamic safety factor γ_{dyn} up to 1.8

HAP 1.15 Hoist Anchor Plate, single and multipoint loads

			Single Point	Single Pulley [a)]	Fixed motor hoist
			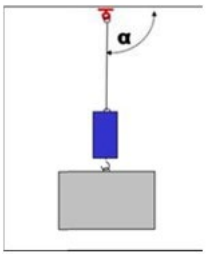	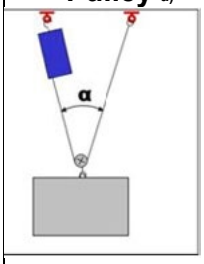	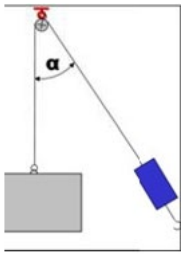
Anchor system Working Load Limitation (WLL) [a)]					
α < 20°	WLL $_{total}$	[metric ton]	1,15	2,25	0,55
20° < α < 45°	WLL $_{total}$	[metric ton]	1,15	2,1	0,5
45° < α < 60°	WLL $_{total}$	[metric ton]	1,15	2,0	0,45
60° < α < 90°	WLL $_{total}$	[metric ton]	1,15	1,6	0,4
90° < α < 120°	WLL $_{total}$	[metric ton]	1,15	1,15	Not applicable

[a)] In accordance with machinery safety directive 2006/42/EC the following working coefficients were implemented:
- Working coefficient of all metal components: γ = 4
- Working coefficient of the cables: γ = 5

Keep distance of min. 4 x h_{ef} between anchors of the two HAPs

Design of anchorage

HAP 1.15 is designed to be used as hoist point for lifting loads under variable directions in elevator installation or maintenance.

The design of an anchorage for the HAP 1.15 must account for varying load conditions (varying directions, dynamic effects, etc.) For this the anchorage for HAP 1.15 has to be designed according to extreme load cases: A concrete anchor can only be considered as suitable for use with the HAP 1.15 hoist point if the approved anchor satisfies ALL of the following load scenarios (e.g. by PROFIS calculation[1]) with ETAG or ICC calculation method:

ETAG design

Conditions:

- Base material: acc. to onsite
- Cracked or uncracked concrete
- Slab thickness: onsite slab thickness[2]
- Dimensions of baseplate see picture
- Partial safety factor for load γ_L= 1.8

Load scenario 1 (pure tension):

F_z	20.7	kN

Load scenario 2 (diagonal 45°):

F_z	14.6	kN
F_x	10.4	kN
F_y	10.4	kN
M_x	0.38	kNm
M_y	0.38	kNm

Load scenario 3 (diagonal shear):

F_x	14.6	kN
F_y	14.6	kN
M_x	0.54	kNm
M_y	0.54	kNm

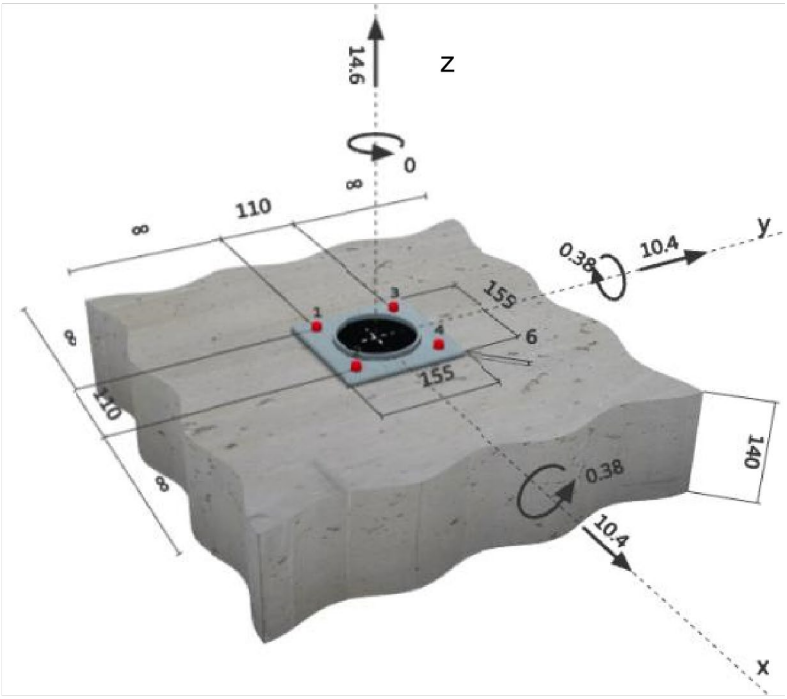

Load scenario 2

For use of HAP 1.15 as ETAG approved anchorage, Hilti recommends use of HST3 M12

[1] Free download of PROFIS Anchor design software from www.hilti.com Service & Support

[2] Minimum slab thickness according to tech. data of applied anchors

ICC Design (ACI 318-14, Chapter 17)

Conditions:

- Base material: acc. to onsite conditions
- Cracked or uncracked concrete
- Slab thickness: onsite slab thickness[3]
- Dimensions of baseplate see picture
- Partial safety factor for load γ_L= 1.8

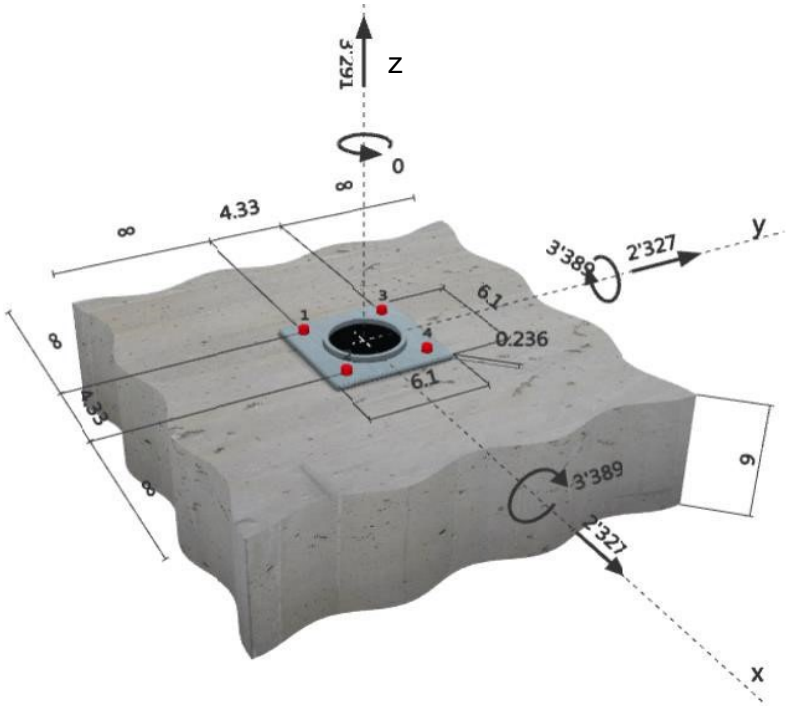

Load scenario 1 (pure tension):		
F_z	4654	lbf

Load scenario 2 (diagonal 45°):		
F_z	3291	Lbf
F_x	2327	Lbf
F_y	2327	Lbf
M_x	3389	in~ lbf
M_y	3389	in~ lbf

Load scenario 3 (diagonal shear):		
F_x	3291	lbf
F_y	2391	Lbf
F_x	4793	lbf
M_y	4793	in~ lbf

For use of HAP 1.15 as ICC approved anchorage (WLL = 2585 lbf), Hilti recommends KB-TZ ½ x 3 1/4”.

[3] Minimum slab thickness according to tech. data of applied anchors.

Onsite Qualification	
Hilti recommends to proof load the installed HAP 1.15 each time after the hoist equipment is installed, adjusted, or changed.	
Test procedure (shown with Hilti Anchor Tester HAT 28 (HAT 30))	
This procedure will verify the fastening capacity of the anchorage and the base material for HAP 1.15 use	
1) Make sure anchors for the HAP 1.15 are correctly installed. Make sure shackle is not attached (de-install shackle if necessary). Connect ring bolt adapter of HAT 28 (HAT 30) to center bolt.	
2) Connect HAT 28 (HAT 30) with ring bolt adapter and position the tester with edges of tester baseplate parallel to edges of HAP plate. Turn crank in clockwise direction until legs are in contact with the base material. Check that pullout force acts parallel to the axis of the anchors and parallel to the legs of the HAT 28 (HAT 30) and HAP 1.15 is centered with HAT 28 (HAT 30).	
3) Set the red handle of the analogue gauge to zero in order to be able to start the measurement.	
4) Hold the HAT 28 (HAT 30) by the grip while increasing the load on the HAP 1.15 by turning the crank in a clockwise direction. Increase the load until proof load of 23kN is attained.	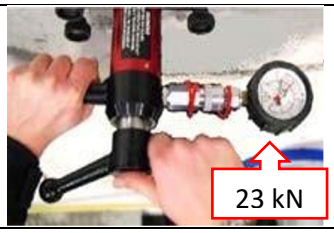
5) Keep the proof load on HAP 1.15 for at least 1 minute. Do not keep retightening if the loading relaxes during this time. The displacement is not allowed to increase in this time. Check the load on the HAT 28 (HAT 30) after 1 minute (black hand) and note down the difference to the initially applied proof load (red hand).	

6) Release the load by turning the crank counterclockwise.	
7) Remove HAT 28 (HAT 30) and ring bolt adapter.	
8) Perform visual check on HAP 1.15 and base material (damages, deformations, cracks). Check if the baseplate is still firmly pressed to the concrete. If baseplate is lose, re-tight anchors and repeat procedure from the beginning. The Hoist Anchor Kit has passed the test and can be loaded with a maximal working load of 1.15 metric tons if the following requirements are met: - The applied proof load of 23 kN decreased less than 10% during the 1 minute test duration. - No damage or deformation of the HAP 1.15. - No damage (e.g. cracks) in the base material.	
9) Install the shackle and plug in the safety pin, optional is to mark or label the HAP 1.15 with date of proof loading, name of testing person	

.

Materials

Part	Material / Mechanical properties or standard
Shackle axis	Galvanized steel R_m > 550N/mm^2
Shackle (U-bolt)	Material, functional dimensions and mech. properties acc. to EN 13889, coated with 100my powder laque.
Eye Bolt	Galvanized steel R_m > 550N/mm^2
Base plate	Galvanized steel R_m > 355N/mm^2

Base material thickness and anchor spacing

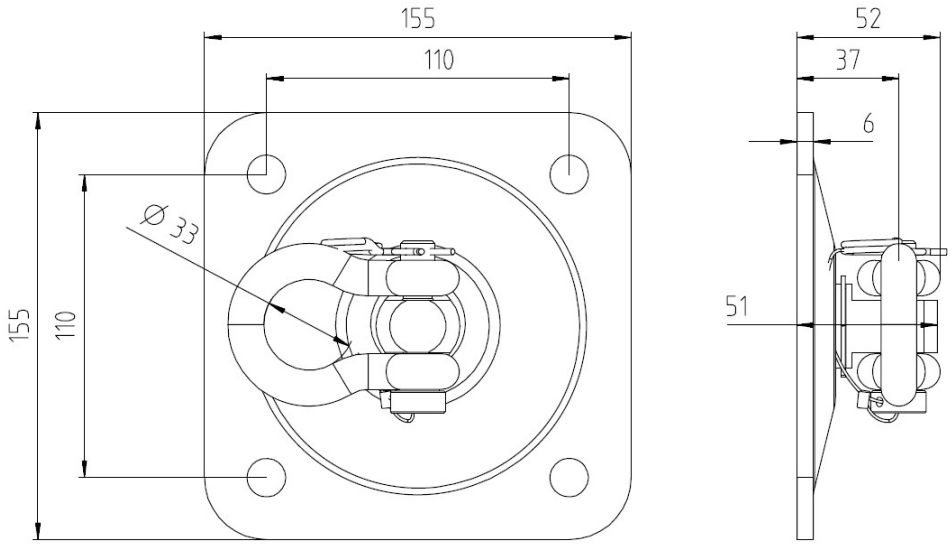

HAP 1.15			
Minimum base material thickness	h_{min}	[mm]	according to technical data of applied anchors
Spacing (Hoist Anchor Plate)	s	[mm]	110
Edge distance	c	[mm]	according to technical data of applied anchors [a)]

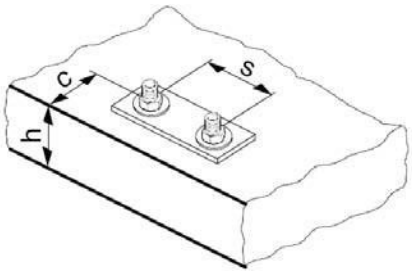

For smaller edge distances the design loads have to be reduced (see ETAG 001, Annex C).

Setting instructions